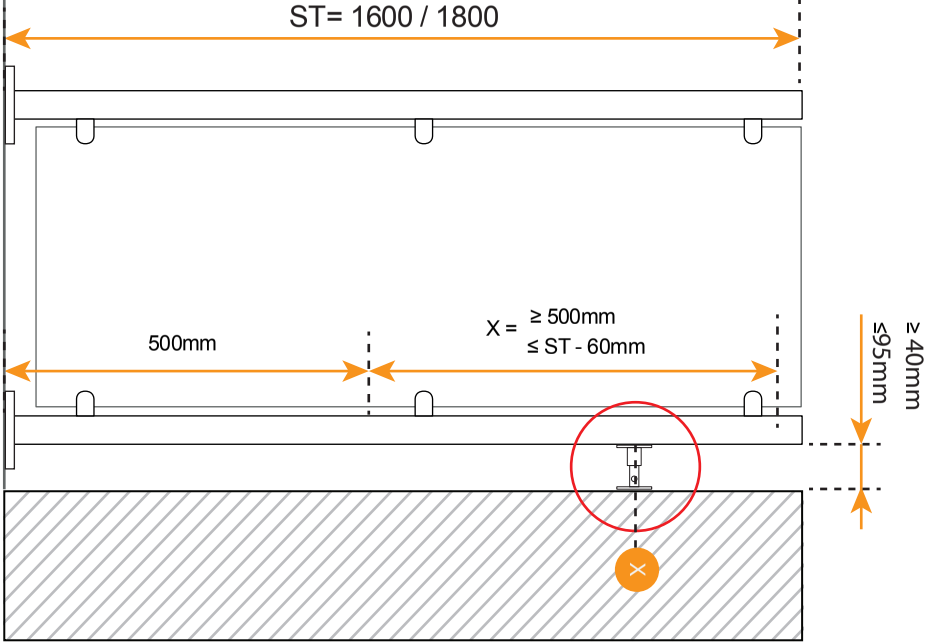
ST= 1600 / 1800
500mm
X = ≥ 500mm
≤ ST - 60mm
≥ 40mm
≤95mm
X